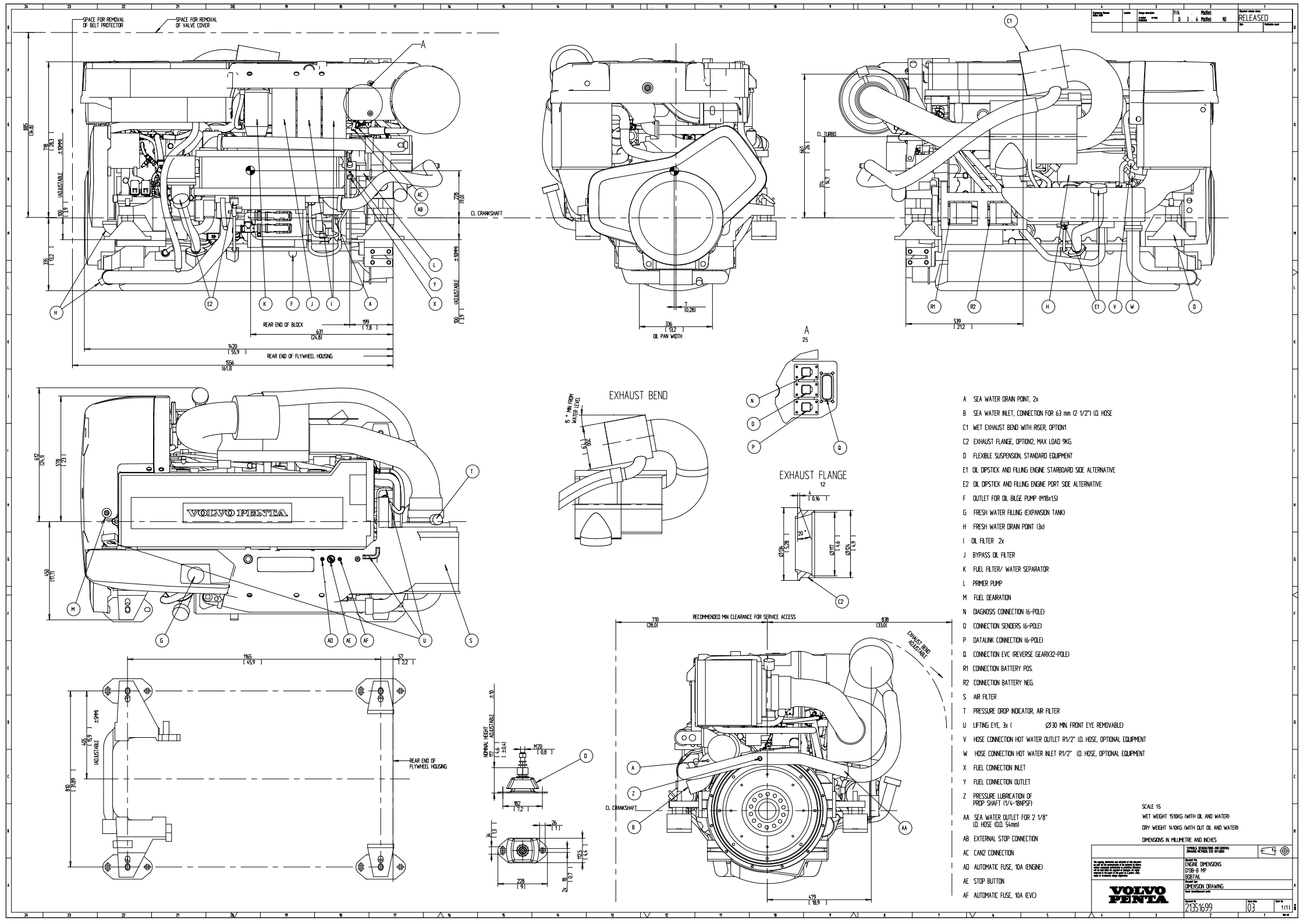
SPACE FOR REMOVAL OF BELT PROTECTOR
SPACE FOR REMOVAL OF VALVE COVER
CL CRANKSHAFT
REAR END OF BLOCK
REAR END OF FLYWHEEL HOUSING
OIL PAN WIDTH
CL TURBO
EXHAUST BEND
EXHAUST FLANGE
VOLVO PENTA
RECOMMENDED MIN CLEARANCE FOR SERVICE ACCESS
EXHAUST BEND ADJUSTABLE
NOMINAL HEIGHT ADJUSTABLE
REAR END OF FLYWHEEL HOUSING
CL CRANKSHAFT
A SEA WATER DRAIN POINT, 2x
B SEA WATER INLET, CONNECTION FOR 63 mm (2 1/2") I.D. HOSE
C1 WET EXHAUST BEND WITH RISER, OPTION1
C2 EXHAUST FLANGE, OPTION2, MAX LOAD 9KG
D FLEXIBLE SUSPENSION, STANDARD EQUIPMENT
E1 OIL DIPSTICK AND FILLING ENGINE STARBOARD SIDE ALTERNATIVE
E2 OIL DIPSTICK AND FILLING ENGINE PORT SIDE ALTERNATIVE
F OUTLET FOR OIL BILGE PUMP (M18x1,5)
G FRESH WATER FILLING (EXPANSION TANK)
H FRESH WATER DRAIN POINT (3x)
I OIL FILTER 2x
J BYPASS OIL FILTER
K FUEL FILTER/ WATER SEPARATOR
L PRIMER PUMP
M FUEL DEARATION
N DIAGNOSIS CONNECTION (6-POLE)
O CONNECTION SENDERS (6-POLE)
P DATALINK CONNECTION (6-POLE)
Q CONNECTION EVC (REVERSE GEAR)(32-POLE)
R1 CONNECTION BATTERY POS.
R2 CONNECTION BATTERY NEG.
S AIR FILTER
T PRESSURE DROP INDICATOR, AIR FILTER
U LIFTING EYE, 3x (Ø30 MIN. FRONT EYE REMOVABLE)
V HOSE CONNECTION HOT WATER OUTLET R1/2" I.D. HOSE, OPTIONAL EQUIPMENT
W HOSE CONNECTION HOT WATER INLET R1/2" I.D. HOSE, OPTIONAL EQUIPMENT
X FUEL CONNECTION INLET
Y FUEL CONNECTION OUTLET
Z PRESSURE LUBRICATION OF PROP SHAFT (1/4-18NPSF)
AA SEA WATER OUTLET FOR 2 1/8" I.D. HOSE (O.D. 54mm)
AB EXTERNAL STOP CONNECTION
AC CAN2 CONNECTION
AD AUTOMATIC FUSE, 10A (ENGINE)
AE STOP BUTTON
AF AUTOMATIC FUSE, 10A (EVC)
SCALE 1:5
WET WEIGHT 1510KG (WITH OIL AND WATER)
DRY WEIGHT 1410KG (WITH OUT OIL AND WATER)
DIMENSIONS IN MILLIMETRE AND INCHES
SYMBOLS, DESIGNATIONS AND GENERAL DRAWING METHODS STD 101-0005
ENGINE DIMENSIONS
D13B-B MP
BOBTAIL
DIMENSION DRAWING
21351699
03
1(1)
RELEASED
VOLVO PENTA