Engineering Release Office (ERO)	Lang/Rev	Change-Award No. / Supplier Supplier	P/A: 0: 1 . 1 Modified	Modified NO	Document release status RELEASED
D-14493-57		SEE ECN			Date 12-02-02

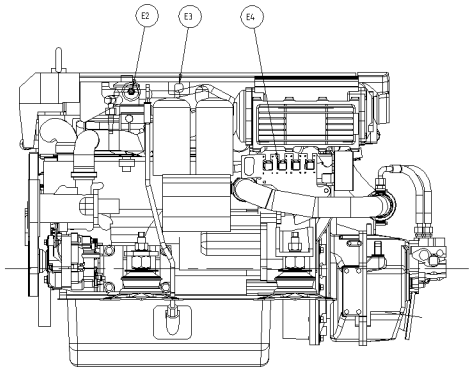

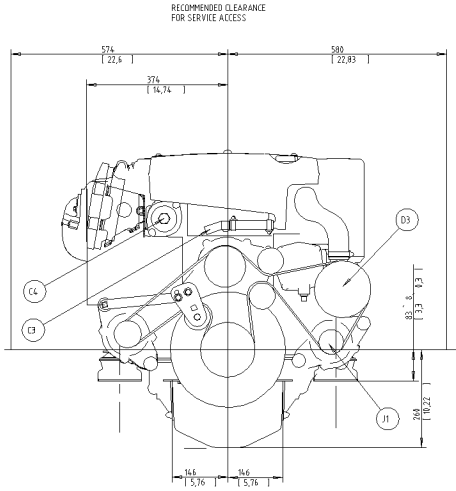

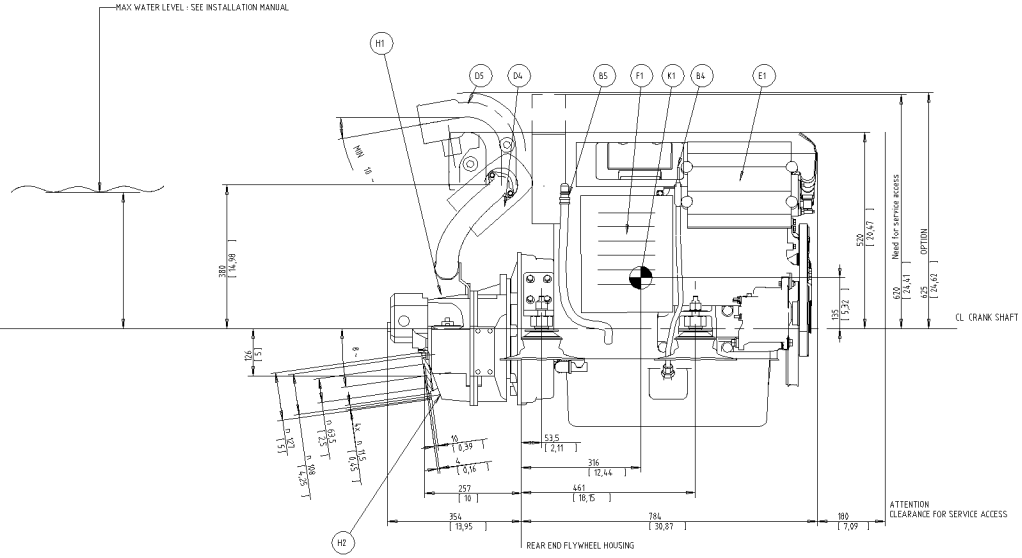

A1	FUEL CONNECTION INLET. 10mm I.D. HOSE
A2	FUEL CONNECTION OUTLET. 10mm I.D. HOSE
A3	FUEL FILTER/WATER SEPARATOR
B1	OIL FILLER ENGINE
B2	OIL FILTER, MAIN
B3	OIL FILTER, BYPASS
B4	OIL DIPSTICK ENGINE PORT STANDARD, CAN BE MOVED TO STARBOARD
B5	OUTLET FOR OIL BILGE PUMP. 12mm/1/2" I.D. HOSE.
B6	CRANK CASE VENTILATION FILTER
C1	FRESH WATER FILLER
C2	FRESH WATER DRAIN POINT
C3	CONNECTION HOT WATER INLET R 1/2" (OPTION)
C4	CONNECTION HOT WATER OUTLET R 1/2" (OPTION)
D1	SEA WATER INLET FOR n 38 /1,5" I.D. HOSE.
D2	SEA WATER DRAIN POINT (2x)
D3	SEA WATER PUMP
D4	WET EXHAUST CONNECTION. 102 mm / 4" I.D. HOSE
D5	EXHAUST RISER (OPTION)
E1	ECU CONTROL UNIT
E2	ENGINE STOP
E3	DIAGNOSE CONNECTOR
E4	DATALINK, SENDER AND AUX (2x)
F1	AIR FILTER
G1	ELASTIC SUSPENSION (4x)
G2	LIFTING EYE, FRONT, n 40
G3	LIFTING EYE, REAR, n 30
H1	OIL DIP STICK TRANSMISSION
H2	OIL DRAIN TRANSMISSION
J1	POWER STEERING PUMP. ALT. EXTRA ALTERNATOR (OPTION)
K1	CENTRE OF GRAVITY

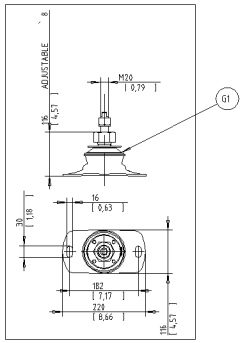

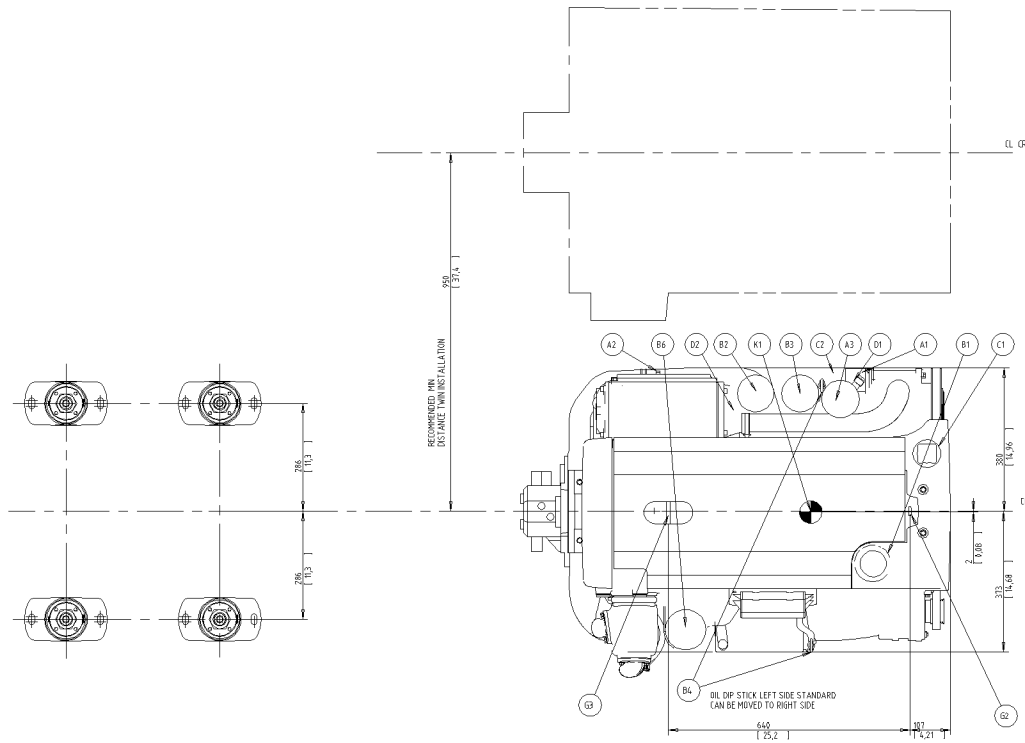

SCALE 1:5

The copying, distribution and utilization of this document as well as the communication of its contents to others without expressed authorization is prohibited. Offenders are liable to the payment of damages. All rights are reserved in the event of the grant of a patent, utility model or ornamental design registration.

VOLVO PENTA

SYMBOLS, DESIGNATIONS AND GENERAL DRAWING METHODS STD 181-0005

Drawing title:
ENGINE DIMENSIONS
D4 HS45AE

Drawing type:
DIMENSION DRAWING

Drawing no: 21912446 | Sheet no: 01 | Sheet qty: 1111