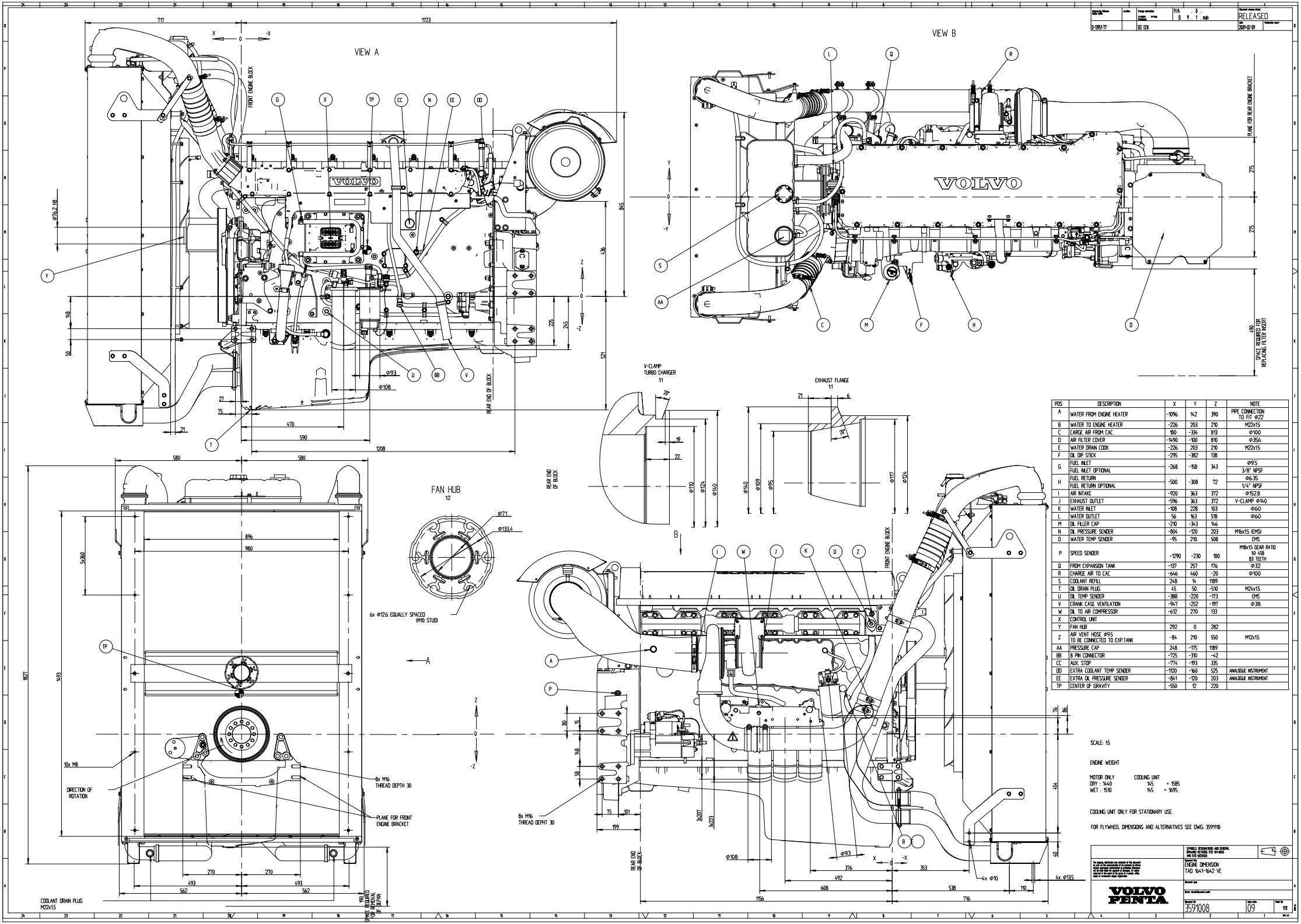

POS	DESCRIPTION	X	Y	Z	NOTE
A	WATER FROM ENGINE HEATER	-1096	142	390	PIPE CONNECTION TO FIT Φ22
B	WATER TO ENGINE HEATER	-226	203	210	M22x1.5
C	CARGE AIR FROM CAC	180	-334	813	Φ100
D	AIR FILTER COVER	-1490	-100	810	Φ356
E	WATER DRAIN COOK	-226	203	210	M22x1.5
F	OIL DIP STICK	-295	-382	138	
G	FUEL INLET	-268	-158	343	Φ9.5
	FUEL INLET OPTIONAL				3/8" NPSF
H	FUEL RETURN	-500	-308	72	Φ6.35
	FUEL RETURN OPTIONAL				1/4" NPSF
I	AIR INTAKE	-920	363	372	Φ152.8
J	EXHAUST OUTLET	-596	363	372	V-CLAMP Φ140
K	WATER INLET	-108	228	103	Φ60
L	WATER OUTLET	56	163	518	Φ60
M	OIL FILLER CAP	-210	-343	146	
N	OIL PRESSURE SENDER	-804	-120	203	M16x1.5 (EMS)
O	WATER TEMP SENDER	-95	210	508	EMS
P	SPEED SENDER	-1290	-230	180	M18x1.5 GEAR RATIO 10 458 83 TEETH
Q	FROM EXPANSION TANK	-137	257	176	Φ32
R	CHARGE AIR TO CAC	-646	460	-20	Φ100
S	COOLANT REFILL	248	14	1189	
T	OIL DRAIN PLUG	45	50	-510	M24x1.5
U	OIL TEMP SENDER	-388	-220	-173	EMS
V	CRANK CASE VENTILATION	-947	-252	-197	Φ38
W	OIL TO AIR COMPRESSOR	-612	270	133	
X	CONTROL UNIT				
Y	FAN HUB	292	0	282	
Z	AIR VENT HOSE Φ9.5 TO BE CONNECTED TO EXP.TANK	-84	210	550	M12x1.5
AA	PRESSURE CAP	248	-175	1189	
BB	8 PIN CONNECTOR	-725	-310	-42	
CC	AUX. STOP	-774	-193	335	
DD	EXTRA COOLANT TEMP SENDER	-1120	-160	525	ANALOGUE INSTRUMENT
EE	EXTRA OIL PRESSURE SENDER	-841	-120	203	ANALOGUE INSTRUMENT
TP	CENTER OF GRAVITY	-550	12	220	