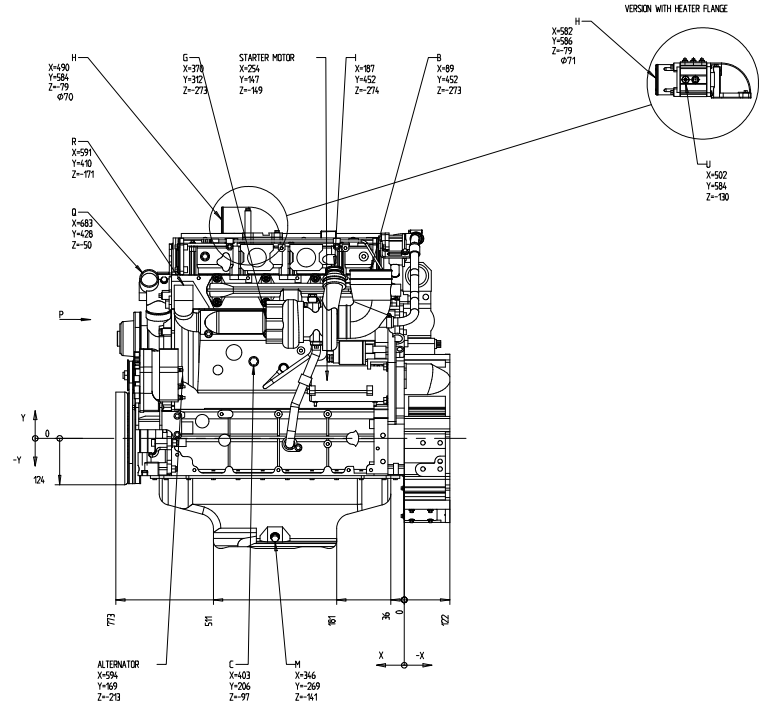

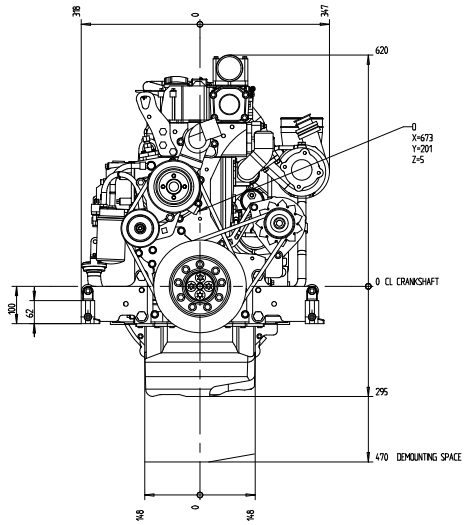

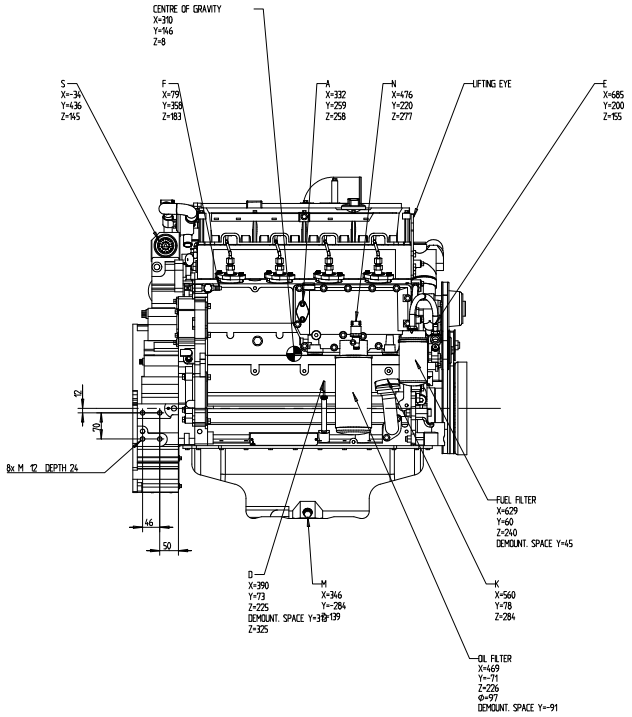

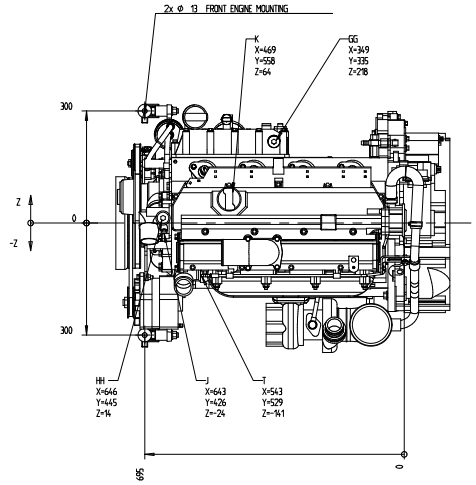

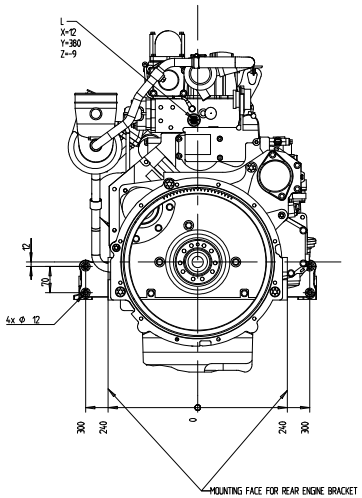

THICKNESS 12 mm

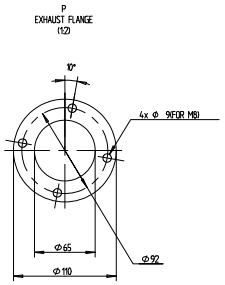

A = ENGINE HEATER (OPTION)

B = AIR INTAKE TO TURBO COMPRESSOR, Ø99

C = COOLANT DRAIN M14x15

D = OIL DIPSTICK

E = FUEL INLET, FOR HOSE INTERNAL Ø12

F = FUEL RETURN AND VENT SCREW, FOR HOSE INTERNAL Ø10

G = EXHAUST OUTLET, TURBO INNER Ø54

H = AIR INTAKE FROM CHARGE AIR COOLER

I = AIR OUTLET TO CHARGE AIR COOLER

J = AIR VENTING FOR COOLANT FILLING, THERMOSTAT HOUSING

K = 2x OIL FILLER CAP

L = COOLANT TEMP SENDER M14x15

M = 2x OIL DRAIN PLUG M18x15

N = OIL PRESSURE SENDER M14x15

O = FROM EXPANSION TANK, Ø22

Q = COOLANT INLET, FOR HOSE INTERNAL Ø50

R = COOLANT OUTLET, FOR HOSE INTERNAL Ø50

S = CONNECTION ECU

T = AIR VENTING, FOR HOSE INTERNAL Ø6

U = CONNECTION POWER RELAIS HEATER FLANGE

GG= TO ENGINE HEATER (EXTERNAL) M26x15

HH= FROM ENGINE HEATER (EXTERNAL) M26x15

SCALE 15

Engineering Release Date 2006	Location
Change description	P/A
RELEASED	

SYMBOLS, DESIGNATIONS AND GENERAL DRAWING METHODS STD 191-0001 ISO STD 5457/5459

Document title: ENGINE DIMENSIONS TAD530GE/531GE EDC4

Document type: DIMENSION DRAWING

Owner manufacturer parts

VOLVO PENTA

Document No: 3593961 | Issue index: 01 | Sheet No: 1 | Sheets: 1

The copying, distribution and utilization of this document as well as the communication of its contents to others without express authorization is prohibited. Offenders are liable to the payment of damages. All rights are reserved in the event of the grant of a patent, utility model or ornamental design registration.