Engineering Release Order (ERO)	Location	Change description Reason for modification	P/A: . Modified: D: 2 . 4 Modified: NO	Document release status RELEASED
D-16060-13		SEE DCN		Date / Modification count

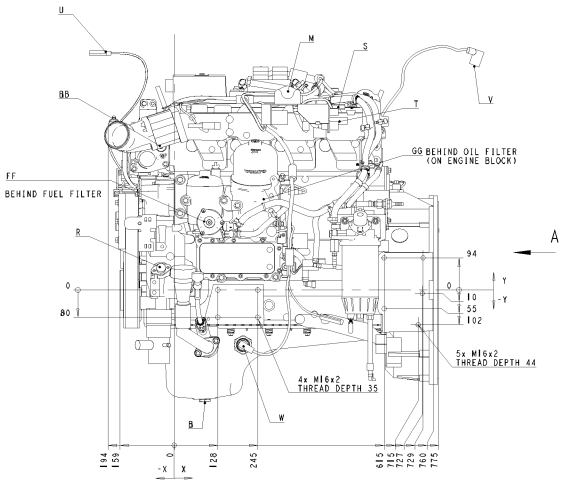

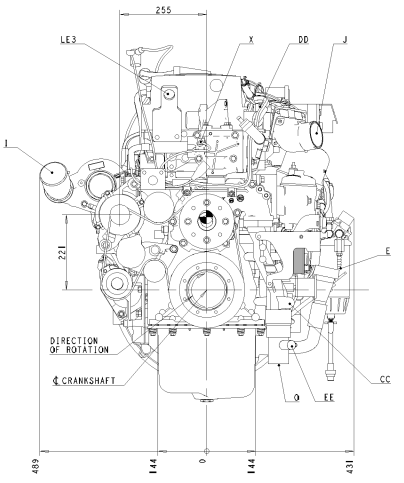

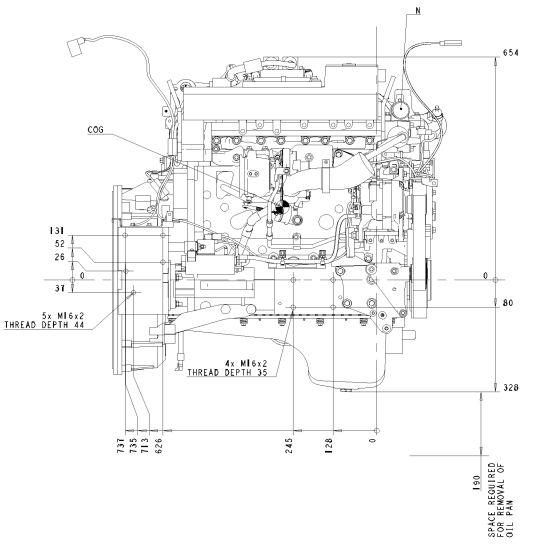

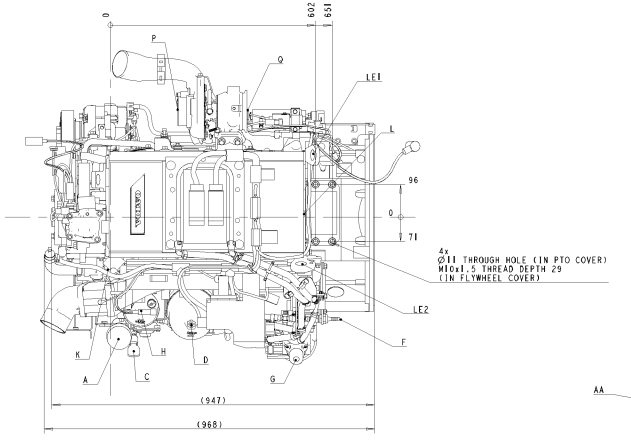

VIEW A

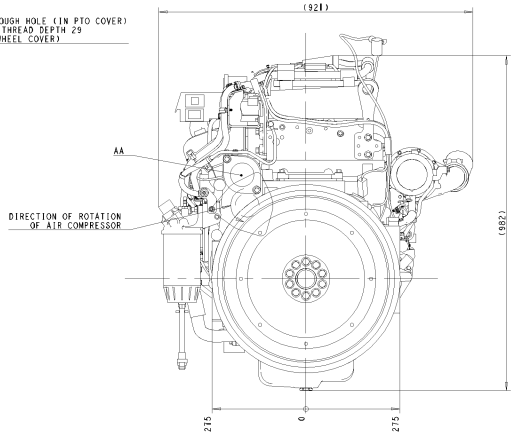

INFORMATION AND COORDINATES					
POS		X	Y	Z	NOTES
A	OIL FILLER CAP	26	67	354	
B	OIL DRAIN CAP	90	-327	0	M24X1.5
C	OIL DIPSTICK	69	37	389	
D	OIL FILTER	237	436	313	
E	FUEL INLET	469	62	388	Ø9.5
F	FUEL OUTLET	672	252	298	Ø9.5
G	FUEL PRE-FILTER	545	220	415	
H	FUEL MAIN FILTER	90	350	271	
I	TO CHARGE AIR COOLER	28	341	-450	Ø80
J	FROM CHARGE AIR COOLER	-169	455	321	Ø80
K	WIRING HARNESS INJECTION PORT	-6	501	150	
L	PTO COVER	565	398	-6	
M	AUX STOP BUTTON	332	578	239	
N	TO RADIATOR, COOLANT OUT	-71	497	-60	Ø50
O	FROM RADIATOR, COOLANT IN	-45	-217	210	Ø60
P	TURBO INLET	198	305	-310	Ø83
Q	EXHAUST OUTLET	401	305	-310	Ø89,16 (Ø124 V-CLAMP)
R	ENGINE BLOCK HEATER	-39	65	240	
S	VODIA, 8-POLE CONNECTOR	480	532	336	
T	CAN, 8-POLE CONNECTOR	480	493	345	
U	COOLANT LEVEL SENSOR	-198	695	-223	FOR VOLVO PENTA EXP. TANK
V	AIR FILTER SENSOR	879	659	-208	
W	OIL LEVEL SENSOR	202	-161	141	
X	TEMP SENSOR COOLANT SYSTEM	-99	430	-19	
AA	POWER STEERING PUMP	622	305	187	
BB	TO CAB HEATER	-39	420	179	M22x1.5
CC	FROM CAB HEATER	-100	-37	240	M22x1.5
DD	DE-AIRATION	-177	533	155	Ø10 (Ø9.5 HOSE TO BE CONNECTED TO EXP TANK)
EE	COOLANT TO EXPANSION TANK	-107	-162	248	Ø28
FF	COOLANT TO COMPRESSOR	92	199	150	QUICK CONNECTOR Ø16
GG	COOLANT FROM COMPRESSOR	258	265	117	Ø20
LE1	LIFTING EYE TOWARDS TURBO	593	559	-182	
LE2	LIFTING EYE TOWARDS MANIFOLD	559	564	136	
LE3	LIFTING EYE FRONT	-47	572	-110	
COG	CENTRE OF GRAVITY	276	214	-2	

SCALE 1:5

FOR TOLERANCES ON MEASURES PLEASE CONTACT VOLVO PENTA

ENGINE WITH SAE1 FLYWHEEL HOUSING, WITH SAE3 ADAPTER

GENERAL DESIGNATIONS AND GENERAL TOLERANCE ACCORDING STD 001-0005

The reproduction, distribution and utilization of this document as well as the communication of its contents to others without expressed authorization is prohibited. Offenders will be held liable for the payment of damages. All rights reserved in the event of the grant of a patent, utility model or ornamental design registration.

Document title: DIMENSION DRAWING MDE 5 VE T2/T3

Document type:

VOLVO PENTA

Owner name/department profile:

Drawing No	Issue index	Sheet No
22349772	02	1

SIZE A4