TAD730V

Engine for industrial applications

TAD 730 V

- Turbocharged
- Air to air intercooled
- Diesel fuel
- Displacement indication (l)
- Generation
- Version
- Versatility engine

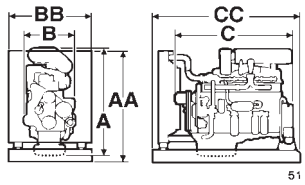

A = 1111 / 43.7 AA = 1530 / 60.2 mm / in.
B = 641 / 25.2 BB = 945 / 37.2 mm / in.
C = 1265 / 49.8 CC = 1851 / 72.8 mm / in.

- Based on Volvo's well proven, dependable six-in-line turbocharged engine.
- Built with a high degree of precision to withstand high outputs and at the same time correspond to high demands on operational safety and service life.
- Smoke control through effective smoke limiter.
- Low fuel consumption and low noise level.

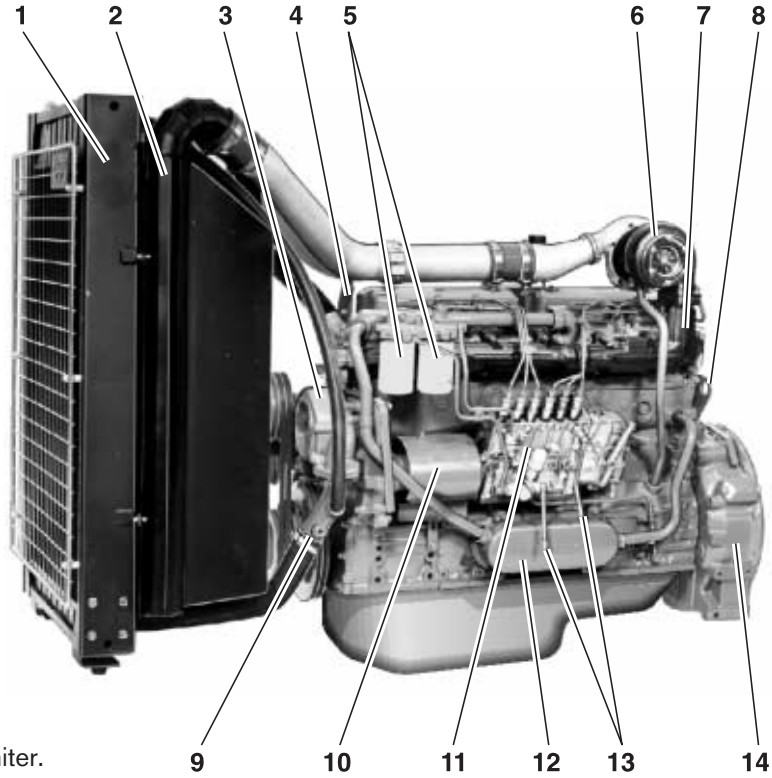

Power Pac with optional equipment

1. Tropical radiator
2. Intercooler
3. Gear-driven coolant pump
4. Lift eyelet
5. Twin fuel filters of throw-away type
6. Turbocharger
7. Air-cooled exhaust manifold
8. Lift eyelet
9. Coolant pipe, inlet
10. Pump coupling guard
11. Injection pump
12. Oil cooler
13. Fuel pipes for tank connection
14. Flywheel housing SAE 2
15. Silencer
16. Relay for inlet manifold heater
17. Inlet manifold heater
18. Air filter
19. Cable iron
20. Coolant pipe, outlet
21. Fan guard
22. Radiator guard
23. Speed control
24. Instrument panel
25. Starter motor
26. Crankcase ventilation
27. Full-flow oil filter of spin-on type
28. By-pass oil filter
29. Oil filler
30. Vibration damper
31. Automatic belt tensioner
32. Base frame
33. Alternator, left hand side
34. Oil drain pump, left hand side
35. Stop solenoid, left hand side
36. Battery box, left hand side

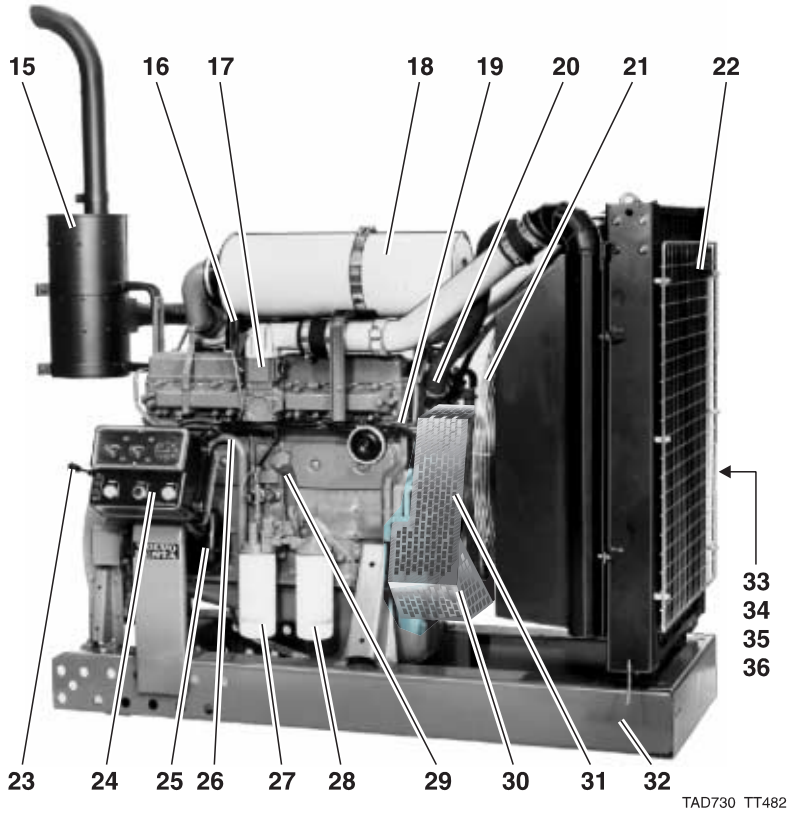

Power Pac with optional equipment

VOLVO PENTA

TAD730V

Technical Data

Volvo Penta reserves the right to make changes at any time, without notice, as to technical data, prices, materials, standard equipment, specifications and models, and to discontinue models.

General

In-line four-stroke diesel engine with direct injection
Turbocharged and air to air intercooled

Number of cylinders	6	Bore	104.77 mm / 4.12 in
Displacement, total	6.73 liter / 411 in^3	Stroke	130 mm / 5.12 in
Firing order	1–5–3–6–2–4	Compression ratio	15.6:1
Rotation direction, anti-clockwise viewed towards flywheel		Dry weight kg/lb Power Pac	1101/2427 Engine only 876/1931 *
		Wet weight kg/lb Power Pac	1169/2577 Engine only 939/2070 *

*) Including radiator and intercooler

TAD 730 V	Speed, rpm	1500	1800	2000	2200
Performance	Test no.		20000185		
ICFN Power without fan	kW / hp	168 / 228	192 / 261	204 / 277	210 / 286
with fan	kW / hp	164 / 223	185 / 252	194 / 264	198 / 269
Torque at ICFN Power	Nm / lbft	1070 / 789	1019 / 752	974 / 718	912 / 673
Mean piston speed	m/s / ft/sec	6.5 / 21.3	7.8 / 25.6	8.7 / 28.5	9.5 / 31.2
Effective mean pressure	MPa / psi	2.0 / 290	1.9 / 276	1.81 / 262	1.70 / 247
Max combustion pressure	MPa / psi	13.5 / 1960	13.1 / 1900	12.5 / 1810	12.0 / 1740
Total mass moment of inertia, J (mR^2)	kgm^2 / lbft^2		1.63 / 38.7		
Degree of irregularity		1:44	1:79	1:120	1:194
Residual speed droop at load increase from 0 to 100%	%	11	9	8	7
Friction Power	kW	20	24	28	31
Lubrication system					
Lubricating oil consumption at ICFN Power	liter/h / US gal/h		0.12 / 0.03 at 1800 rpm		
Oil system capacity including filters	liter / US gal		29 / 7.66		
Oil change interval VDS-2	h		600		
VDS	h		400		
CCMC D5	h		200		
Fuel system					
Specific fuel consumption at					
25% of ICFN Power	g/kWh / lb/hph	237 / 0.384	248 / 0.400	259 / 0.420	276 / 0.447
50% of ICFN Power	g/kWh / lb/hph	213 / 0.345	218 / 0.353	223 / 0.361	233 / 0.378
75% of ICFN Power	g/kWh / lb/hph	207 / 0.336	209 / 0.339	213 / 0.345	221 / 0.358
100% of ICFN Power	g/kWh / lb/hph	206 / 0.334	207 / 0.336	213 / 0.345	221 / 0.358
Intake and exhaust system					
Air consumption	m^3/ min / cfm	10.0 / 350	12.8 / 450	14.4 / 510	15.6 / 550
Max allowable air intake restriction	kPa / In wc		5 / 20		
Heat rejection to exhaust	kW / BTU/min	148 / 8420	168 / 9550	187 / 10630	202 / 11490
Exhaust gas temperature after turbine	°C / °F	580 / 1080	540 / 1000	540 / 1000	530 / 990
Max allowable back-pressure in exhaust line	kPa / In wc	5.6 / 22.5	6.6 / 26.5	9.9 / 39.8	12.0 / 48.2
Exhaust gas flow	m^3/min / cfm	29.9 / 1060	35.4 / 1250	38.6 / 1360	41.2 / 1460
Exhaust gas smoke	Bosch units	1.1	0.6	0.6	0.8
Cooling system					
Heat rejection radiation from engine	kW / BTU/min	10 / 570	12 / 680	12 / 680	13/ 740
Heat rejection to coolant	kW / BTU/min	72 / 4090	78 / 4440	82 / 4660	88 / 5010

Power Standards
The engine performance corresponds to ISO 3046, BS 5514 and DIN 6271. The technical data applies to an engine without cooling fan and operating on a fuel with calorific value of 42.7 MJ/kg (18360 BTU/lb) and a density of 0.84 kg/liter (7.01 lb/US gal, 8.42 lb/Imp gal), also where this involves a deviation from the standards.

Rating Guideline
ICFN power rating corresponds to ISO Standard Fuel Stop Power for continuous operation at variable speed. It is intended for constant load applications with uninterrupted service at full load for extended periods of time. No overload capability is available with this rating.

Derating
The engine may be operated up to 1000 m altitude and 50 °C ambient air temperature without derating. For operation at higher altitudes and temperatures the power should be derated according to the following factors:

Altitude derating factor <3000 m.	4% / 500 m.
Altitude derating factor >3000 m.	6% / 500 m.
Ambient temperature derating factor	1.5% / 5 °C.
Humidity	No derating

AB Volvo Penta
SE-405 08 Göteborg, Sweden