Engineering Release Date/Sign	Location	Change description	P/A	Modified	Document status block
		Change: W-Wide Modified	0 1 . 4	Modified NO	RELEASED

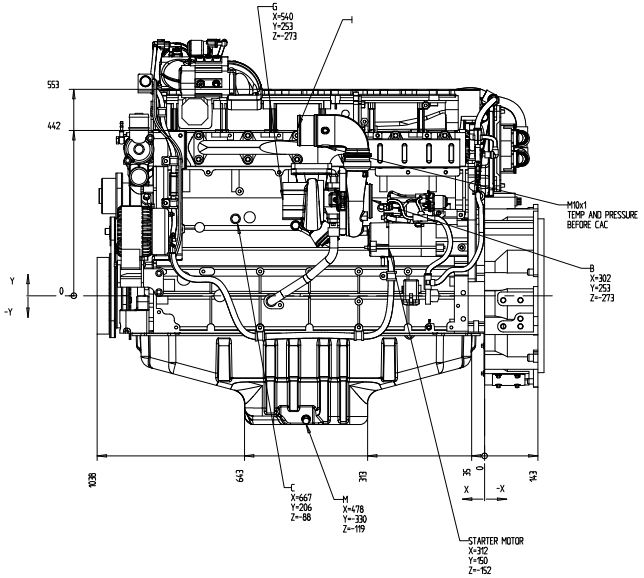

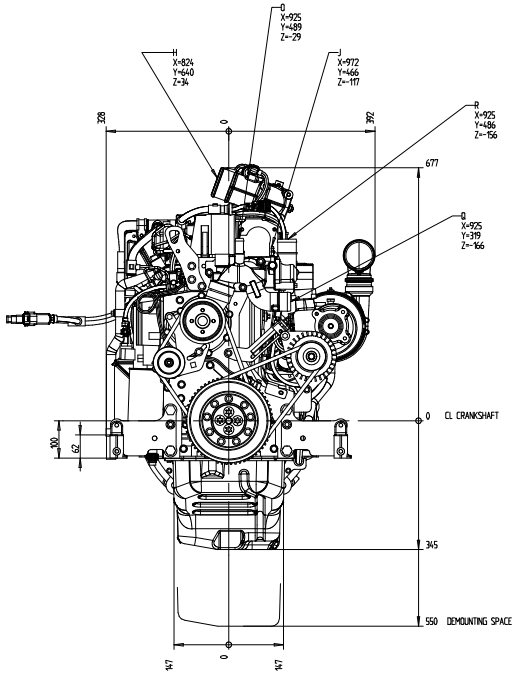

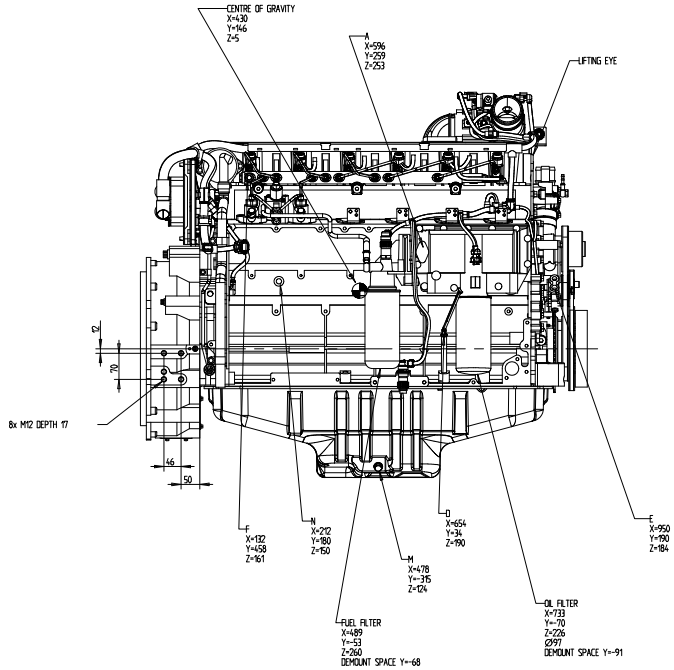

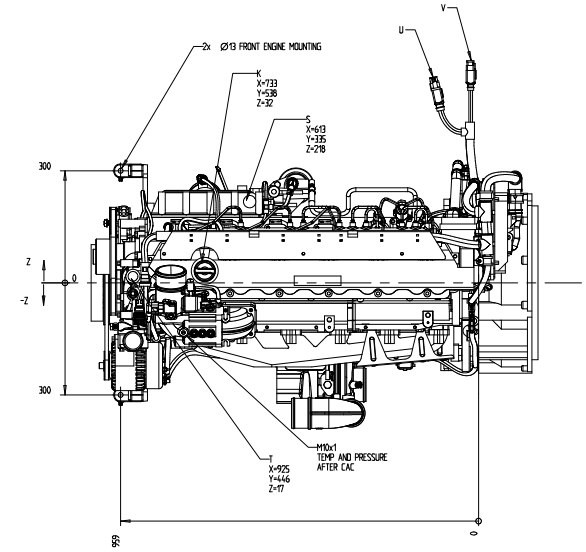

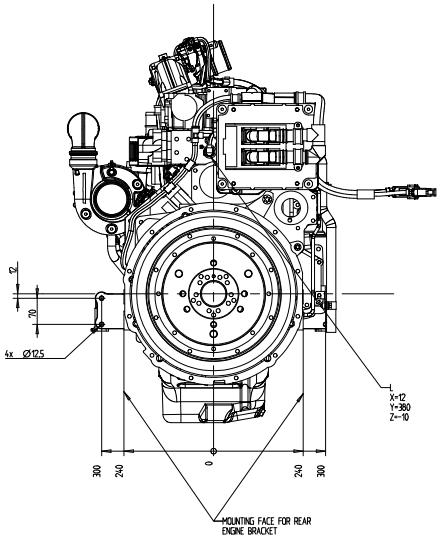

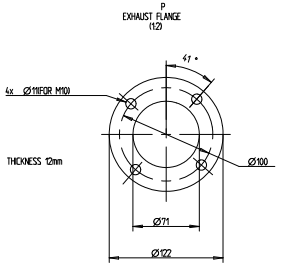

SCALE: 1:5

A = ENGINE HEATER OPTION
B = AIR INTAKE TURBO COMPRESSOR Ø90
C = COOLANT DRAIN M14x1.5
D = OIL DIPSTICK
E = FUEL INLET FOR HOSE INTERNAL Ø12
F = FUEL RETURN AND VENT SCREW, FOR HOSE INTERNAL Ø10
G = EXHAUST OUTLET, TURBO INNER Ø66
H = AIR INTAKE FROM CHARGE AIR COOLER Ø80
I = AIR OUTLET TO CHARGE AIR COOLER Ø80
J = AIR VENTING, FOR HOSE INTERNAL Ø6
K = OIL FILLER CAP
L = COOLANT TEMP SWITCH/SENDER M14x1.5
M = 2x OIL DRAIN PLUG M18x1.5
N = OIL PRESSURE (EXTERNAL) M14x1.5
O = FROM EXPANSION TANK, Ø22
Q = COOLANT INLET, FOR HOSE INTERNAL Ø50
R = COOLANT OUTLET, FOR HOSE INTERNAL Ø50
S = TO ENGINE HEATER (EXTERNAL) M26x1.5
T = FROM ENGINE HEATER (EXTERNAL) M26x1.5
U = CAN, 8-POLE CONNECTOR
V = VODIA, 6-POLE CONNECTOR

SYMBOLS, DEFINITIONS AND GENERAL DRAWING PRINCIPLES, STD 191-0005

The copying, distribution and utilization of this document as well as the communication of its contents to others without express authorization is prohibited. Offenders will be held liable for the payment of damages. All rights reserved in the event of the grant of a patent, utility model or ornamental design registration.

VOLVO PENTA

Document title
ENGINE DIMENSIONS
TAD 750/751 GE

Document type
DIMENSION DRAWING

Document No
21597946

Issue index
01

Sheet No
1 (1)