Engineering Release Before 10000	Location	Change description	P/A: . Modified:	Document release status:
		DIMENSIONS ADDED/CHANGED	D: 1 . 4 Modified: NO	RELEASED
				DATE / Modification count

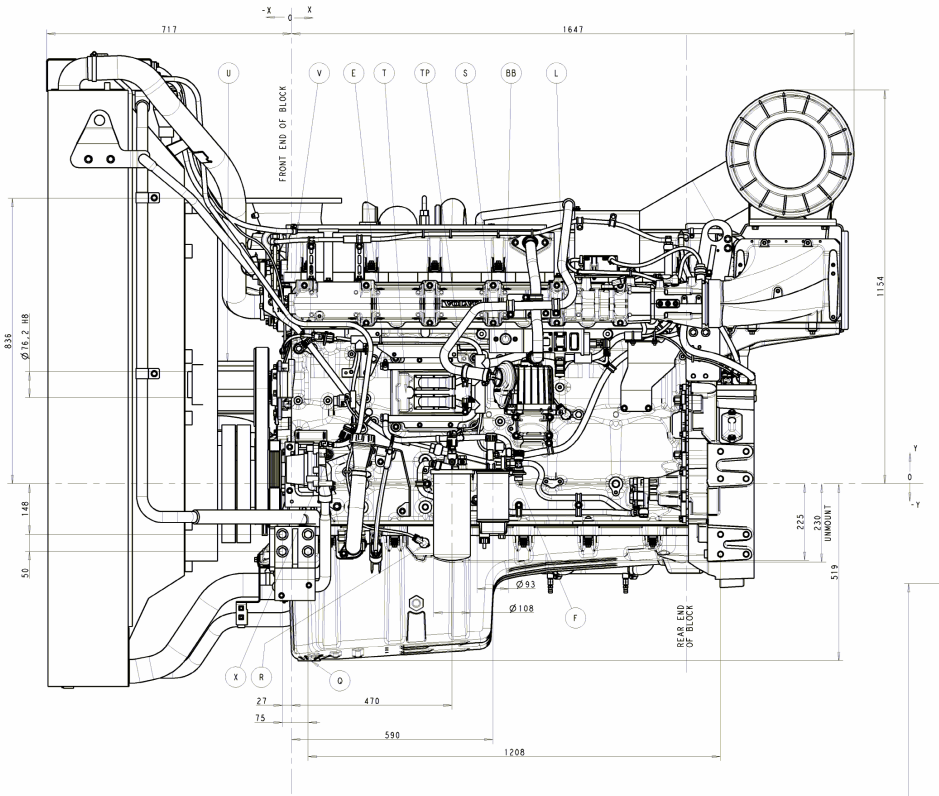

POS	DESCRIPTION	X	Y	Z	NOTE
A	WATER FROM ENGINE HEATER	1096	390	-148	PIPE CONNECTION TO FIT Ø22
B	WATER TO ENGINE HEATER	226	210	-147	M22x1.5
C	WATER DRAIN COOK	226	210	-147	M22x1.5
D	OIL DIP STICK	298	142	379	
E	FUEL INLET	275	353	195	Ø9.5
	FUEL INLET OPTIONAL				3/8" NPSF
F	FUEL RETURN	628	92	301	Ø6.35
	FUEL RETURN OPTIONAL				1/4" NPSF
G	AIR INTAKE	538	668	-433	Ø150
H	EXHAUST OUTLET	187	668	-433	V-CLAMP Ø140
I	WATER INLET				Ø60
J	WATER OUTLET	-66	518	-163	Ø60
K	OIL FILLER CAP	210	146	343	
L	OIL PRESSURE SENDER	804	203	120	M16x1.5 (EMS)
M	WATER TEMP SENDER	110	560	-216	EMS
N	SPEED SENDER	1260	180	230	M18x1.5 GEAR RATIO 1:0.458 83 TEETH
O	FROM EXPANSION TANK	-263	133	-583	Ø32
P	COOLANT REFILL	-651 -563 -563	1232 1259 1259	-615 328 -254	
Q	OIL DRAIN PLUG	53	-519	-54	M24x1.5
R	OIL TEMP SENDER	388	-171	204	EMS
S	CLOSED CRANK CASE VENTILATION	603	311	288	
T	CONTROL UNIT	343	267	176	
U	FAN HUB	-307	282	0	
V	AIR VENT PIPE OD Ø8 TO BE CONNECTED TO EXP. TANK	15	740	165	
W	AIR VENT HOSE Ø9.5 TO BE CONNECTED TO EXP. TANK	84	550	-245	M12x1,5
X	AIR VENTILATION HOSE Ø9.5 FROM PUMP TO EXP. TANK	87	105	312	
AA	PRESSURE CAP	-563 -563	1259 1259	328 -254	
BB	AUX. STOP	627	424	258	
TP	CENTER OF GRAVITY	519	242	-33	

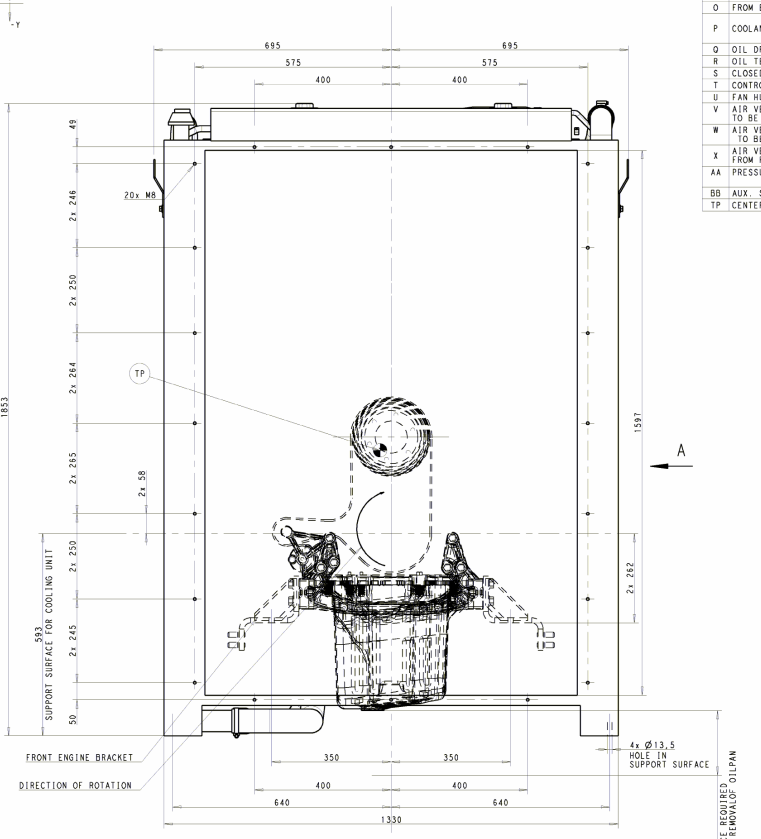

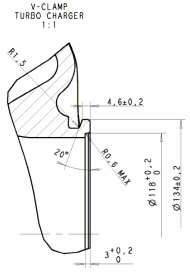

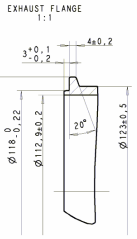

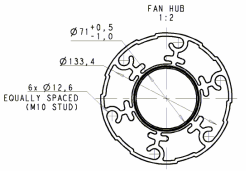

SCALE 1:5

SYMBOLS, DESIGNATIONS AND GENERAL DRAWING METHODS STD 181-0005

The copying, distribution and utilization of this document as well as the communication of its contents to others without express authorization is prohibited. Offenders will be held liable for the payment of damages. All rights are reserved in the event of the grant of a patent, utility model or ornamental design registration.

Document title:
ENGINE DIMENSIONS
ENGINE TWD1672/73GE

Document type:
DIMENSION DRAWING

Owner domain/Document prefix

VOLVO PENTA

Document No	Issue index	Sheet No
22438433	01	1(2)